FEDERAL SUPPLY CLASS
5940

THIS DOCUMENT HAS BEEN TAKEN DIRECTLY FROM U.S. MILITARY SPECIFICATION MIL-T-81714/60A, NOTICE 1 AND CONTAINS ONLY MINOR EDITORIAL AND FORMAT CHANGES REQUIRED TO BRING IT INTO CONFORMANCE WITH THE PUBLISHING REQUIREMENTS OF SAE TECHNICAL STANDARDS. THE INITIAL RELEASE OF THIS DOCUMENT IS INTENDED TO REPLACE MIL-T-81714/60A, NOTICE 1. ANY PART NUMBERS ESTABLISHED BY THE ORIGINAL SPECIFICATION REMAIN UNCHANGED.

THE ORIGINAL MILITARY SPECIFICATION WAS ADOPTED AS AN SAE STANDARD UNDER THE PROVISIONS OF THE SAE TECHNICAL STANDARDS BOARD (TSB) RULES AND REGULATIONS (TSB 001) PERTAINING TO ACCELERATED ADOPTION OF GOVERNMENT SPECIFICATIONS AND STANDARDS. TSB RULES PROVIDE FOR (A) THE PUBLICATION OF PORTIONS OF UNREVISED GOVERNMENT SPECIFICATIONS AND STANDARDS WITHOUT CONSENSUS VOTING AT THE SAE COMMITTEE LEVEL, AND (B) THE USE OF THE EXISTING GOVERNMENT SPECIFICATION OR STANDARD FORMAT.

UNDER DEPARTMENT OF DEFENSE POLICIES AND PROCEDURES, ANY QUALIFICATION REQUIREMENTS AND ASSOCIATED QUALIFIED PRODUCTS LISTS ARE MANDATORY FOR DOD CONTRACTS. ANY REQUIREMENT RELATING TO QUALIFIED PRODUCTS LISTS (QPL'S) HAS NOT BEEN ADOPTED BY SAE AND IS NOT PART OF THIS TECHNICAL REPORT.

ISSUED PROPOSED DRAFT 2004-03

THIRD ANGLE PROJECTION

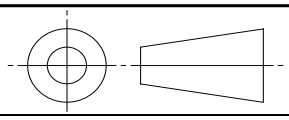

CUSTODIAN: AE-8/AE-8C2

SAE Aerospace
An SAE International Group

AEROSPACE STANDARD

TERMINAL JUNCTION SYSTEM, TERMINAL JUNCTION BLOCKS, SECTIONAL, BUSSING MODULES, FEEDBACK TYPE, SERIES II

AS81714/60
SHEET 1 OF 6

Copyright 2004 SAE International
All rights reserved. No part of this publication may be reproduced, stored in a retrieval system or transmitted, in any form or by any means, electronic, mechanical, photocopying, recording, or otherwise, without the prior written permission of SAE.
TO PLACE A DOCUMENT ORDER: Tel: 877-606-7323 (inside USA and Canada) Tel: 724-776-4970 (outside USA)
Fax: 724-776-0790 Email: custsvc@sae.org SAE WEB ADDRESS: http://www.sae.org

THIS SPECIFICATION IS APPROVED FOR USE BY ALL DEPARTMENTS AND AGENCIES OF THE DEPARTMENT OF DEFENSE.

THE COMPLETE REQUIREMENTS FOR ACQUIRING THE MODULE DESCRIBED HEREIN SHALL CONSIST OF THIS DOCUMENT AND THE LATEST ISSUE OF SPECIFICATION MIL-T-81714.

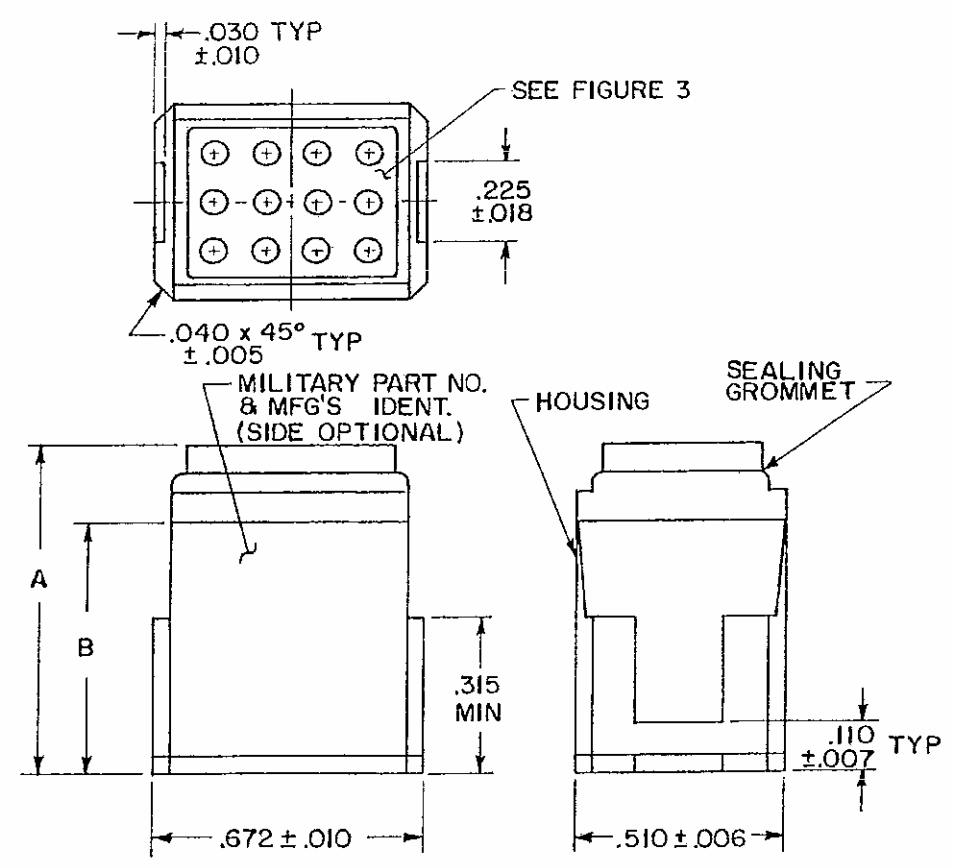

FIGURE 1. BLOCK SIZE 22, 20 AND 16.

MIL-T-81714/60A, DATED 27 JUNE 1990, IS INACTIVE FOR NEW DESIGN AND IS NO LONGER USED, EXCEPT FOR REPLACEMENT PURPOSES.

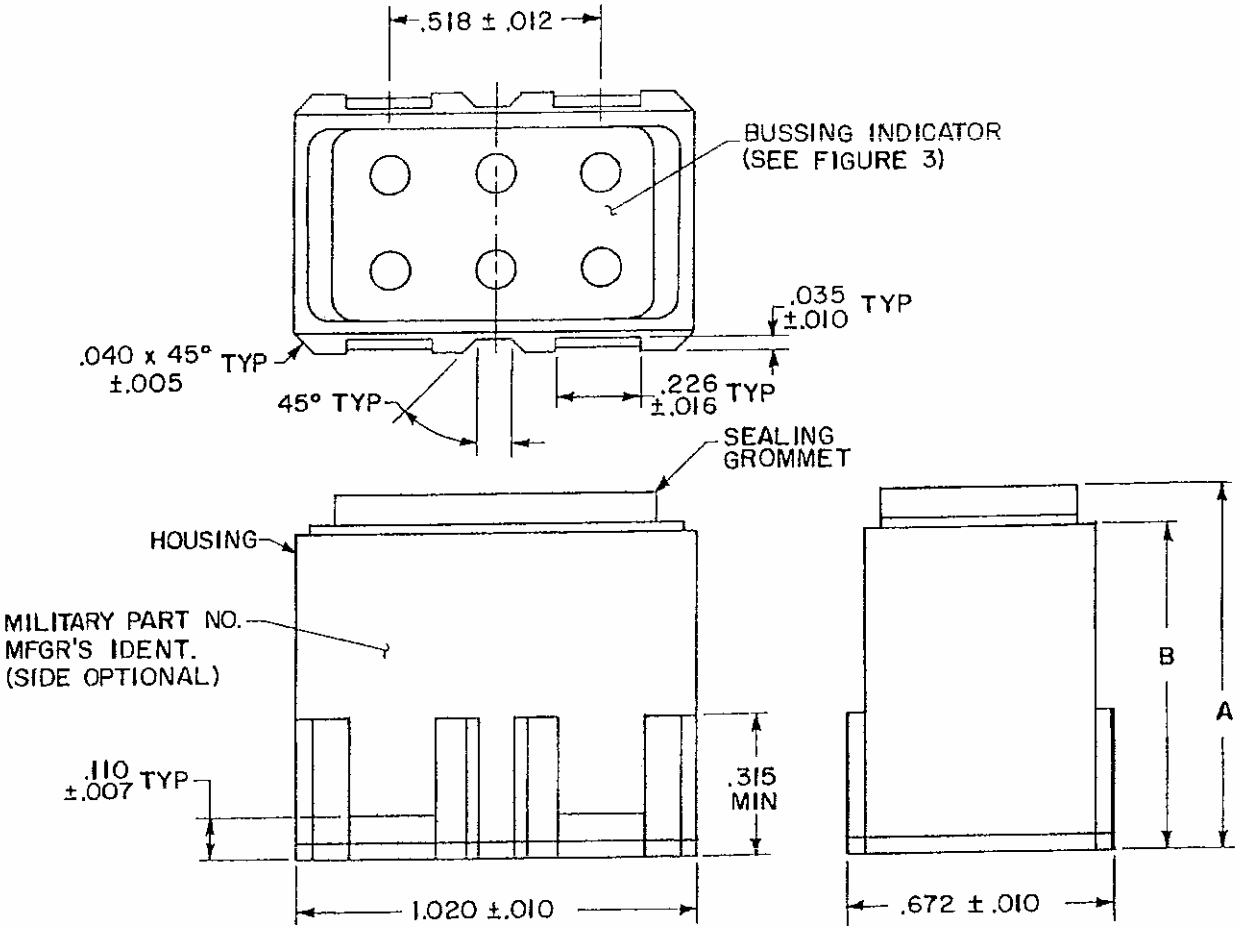

FIGURE 2. BLOCK, SIZE 12.

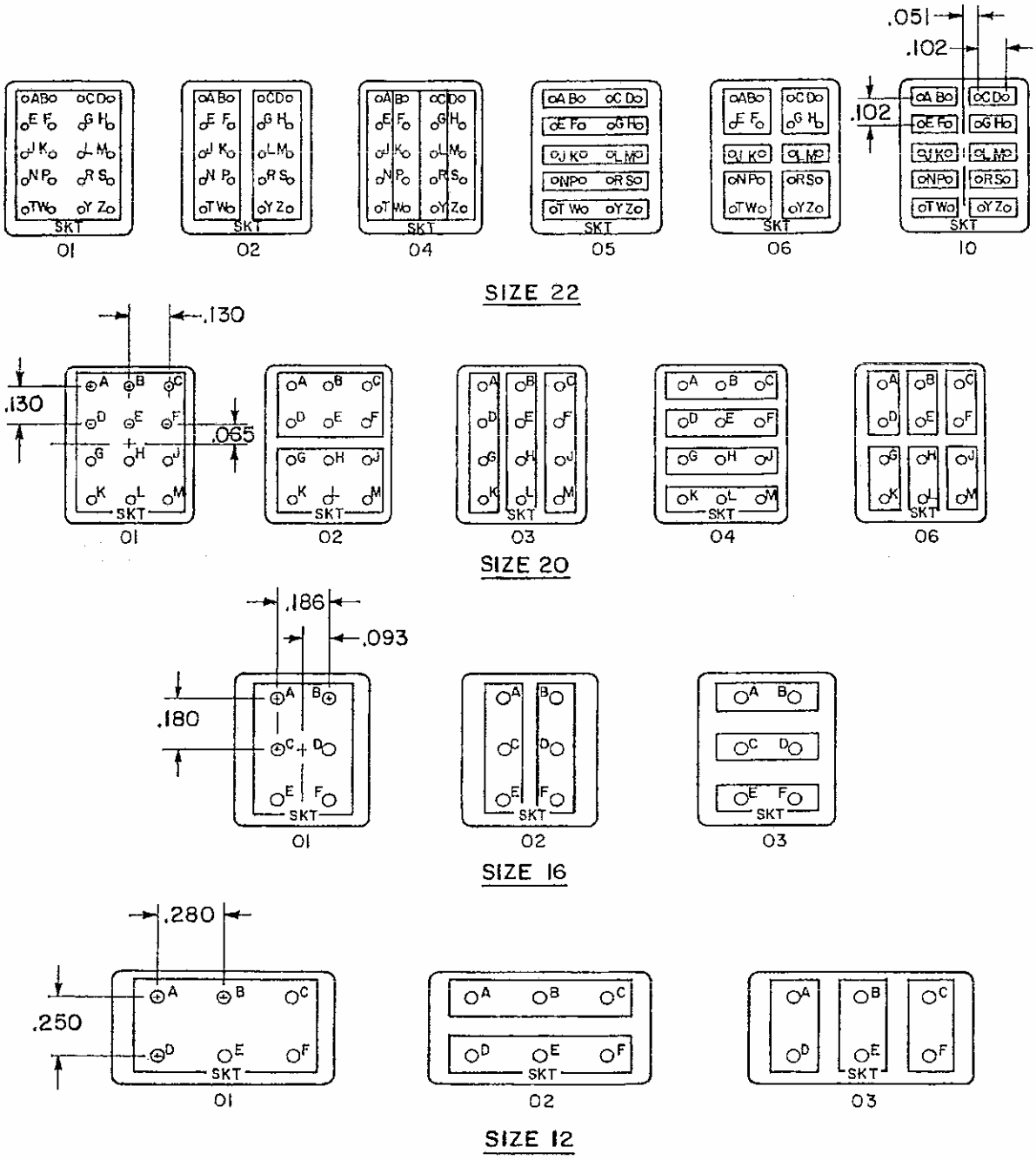

All dimensions of this figure are reference.

FIGURE 3. BUSSING ARRANGEMENTS.

TABLE 1. DIMENSIONS.

COMPONENT DESIGNATOR	BUSSING DESIGNATOR	BUS/CONTACT DESCRIPTION	DIMENSIONS	
			A MAX	B MAX
22	01	1 20 PIN BUS	.760	.730
22	02	2 10 PIN BUSES	.760	.730
22	04	4 5 PIN BUSES	.760	.730
22	05	5 4 PIN BUSES	.760	.730
22	06	2 2 PIN BUSES 4 4 PIN BUSES	.760	.730
22	10	10 2 PIN BUSES	.760	.730
20	01	1 12 PIN BUS	.920	.890
20	02	2 6 PIN BUSES	.920	.890
20	03	3 4 PIN BUSES	.920	.890
20	04	4 3 PIN BUSES	.920	.890
20	06	6 2 PIN BUSES	.920	.890
16	01	1 6 PIN BUS	.920	.890
16	02	2 3 PIN BUSES	.920	.890
16	03	3 2 PIN BUSES	.920	.890
12	01	1 6 PIN BUS	1.047	1.017
12	02	2 3 PIN BUSES	1.047	1.017
12	03	3 2 PIN BUSES	1.047	1.017

TABLE 2

COMPONENT DESIGNATOR	CONTACT PART NOS.	INSERTING/REMOVAL TOOL	END SEALING PLUG	BLOCK REMOVAL TOOL
22	M39029/22-191	M81969/14-01	MS27488-22	M81714/69-01
20	M39029/22-192	M81969/14-10	M27488-20	M81714/69-01
16	M39029/22-193	M81969/14-03	M27488-16	M81714/69-01
12	M39029/22-605	M81969/16-03 M81969/8 -10	M27488-12	M81714/69-02

INCH	MM	INCH	MM	INCH	MM	INCH	MM
.005	0.13	.040	1.02	.186	4.72	.730	18.54
.006	0.15	.051	1.30	.225	5.72	.760	19.30
.007	0.18	.065	1.65	.226	5.74	.890	22.61
.010	0.25	.083	2.11	.250	6.35	.920	23.37
.012	0.30	.093	2.36	.280	7.11	1.017	25.83
.016	0.41	.102	2.59	.315	8.00	1.020	25.91
.018	0.46	.110	2.79	.510	12.95	1.047	26.59
.030	0.76	.130	3.30	.518	13.16		
.035	0.89	.180	4.57	.672	17.07		

NOTES:

1. DIMENSIONS ARE IN INCHES.

2. METRIC EQUIVALENTS (TO THE NEAREST .01MM) ARE GIVEN TOR GENERAL INFORMATION ONLY AND ARE BASED UPON 1 INCH - 25.4MM.

3. BLOCK IS DESIGNED FOR INSTALLATION IN MIL-T-81714/67 RACKS OR MIL-T-81714/68 BRACKETS.
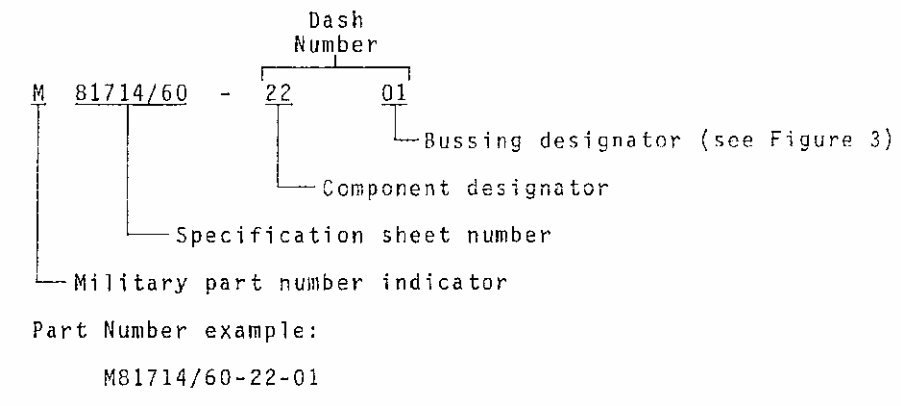
4. THE PART NUMBER CONSISTS OF THE LETTER M, SPECIFICATION SHEET NUMBER, COMPONENT DESIGNATOR AND BUSSING DESIGNATOR (SEE FIGURE 3).